PART NO.	THREAD FORM
01.S10.0	3.095 X 6 TPI
01.S10.1	3.234 x 6 TPI
01.S10.2	3.078 X 6 TPI
01.S10.3	3.00 X 8 TPI
01.S10.4	3.156 X 6 TPI
01.S10.5	2.843 X 8 TPI
01.S10.6	3.281 x 8 TPI
01.S10.7	3.030 X 8 TPI
01.S10.8	3.125 X 7.5 TPI
01.S10.10	3.062 X 6 TPI
01.S10.11	3.022 X 7 TPI
01.S10.12	3.165 X 7.5TPI
01.S10.13	3.078 x 8 TPI
01.S10.14	.
01.S10.17	3.093 X 6 TPI
01.S10.18	2.990 X 8 TPI
01.S10.19	2.940 X 7.5TPI
01.S10.21	3.062 X 8 TPI
01.S10.22	2.950 X 8 TPI
01.S10.26	3.250 X 6 TPI
01.S10.29	3.230 X 5 TPI
01.S10.30	3.250 X 5 TPI
01.S10.31	3.031 X 7 TPI

REVISIONS				
REV	DESCRIPTION	DATE	DRAWN BY	APPROVED

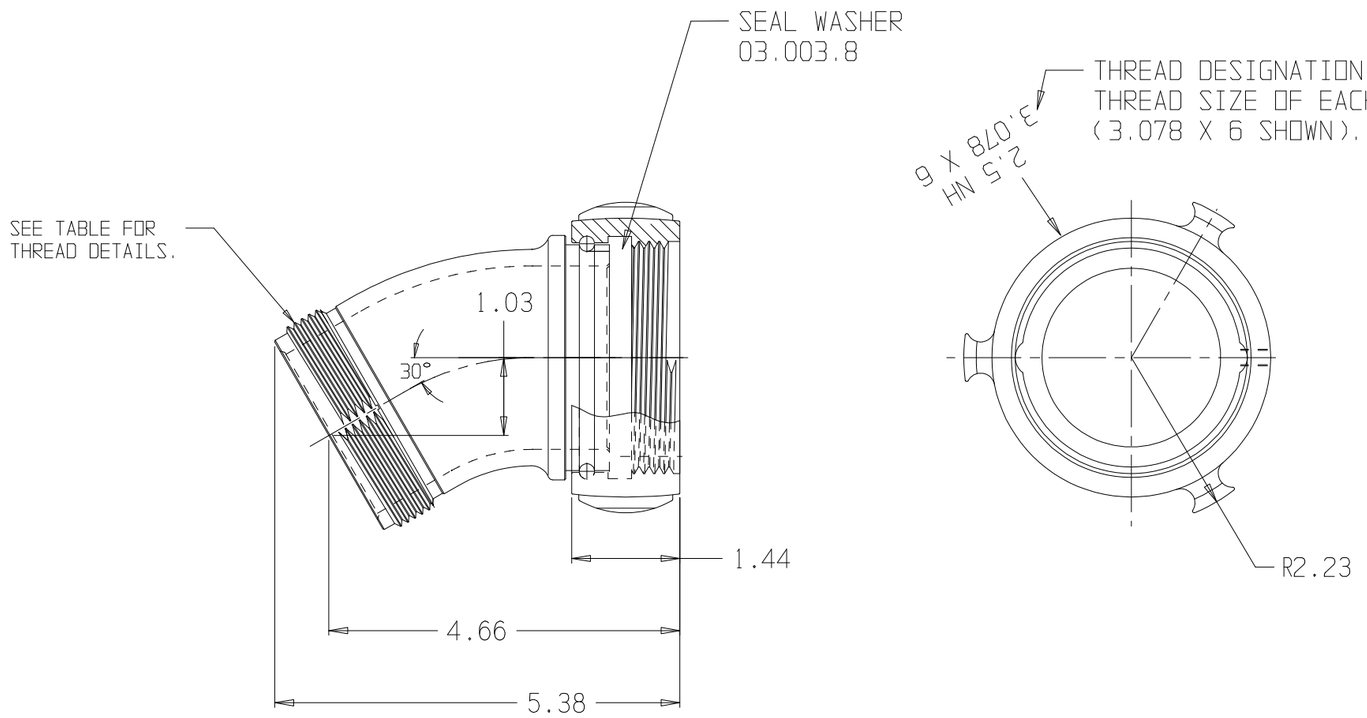

NOTES:

1) CHROME PLATED

TRIDENT
EMERGENCY PRODUCTS, LLC

SPCL.THD 2.5" X 30° ADPTR.

REPORT ERRORS & CHANGES
REMOVE ALL SHARP EDGES
UNLESS OTHERWISE SPECIFIED
ALL DIMENSIONS ARE IN INCHES

STANDARD TOLERANCES: DECIMALS .XX ± .030 .XXX ± .015 ANGLES ± 1/2°

COPYRIGHT ©
DRAWING NOT TO BE REPRODUCED OR USED TO MAKE OTHER DRAWINGS OR MACHINERY

SIZE B | DWG NO. 01.S10.XXPC | REV

DRAWN BY MS | CHECKED BY MS | DATE 10/24/2003 | SCALE 1:2 | SHEET 1 OF 2