PART NO.	THREADFORM
01.S05.0	2.100 x 11 TPI
01.S05.1	1.933 X 11.5TPI
01.S05.2	2.100 X 8 TPI
01.S05.XX.	
01.S05.XX.	
01.S05.XX	
01.S05.XX	
01.S05.XX	
01.S05.XX	
01.S05.XX	
01.S05.XX	
01.S05.XX	
01.S05.XX	
01.S05.XX	
01.S05.XX	
01.S05.XX	
01.S05.XX	
01.S05.XX	
01.S05.XX	
01.S05.XX	
01.S05.XX	
01.S05.XX	
01.S05.XX	
01.S05.XX	
01.S05.XX	
01.S05.XX	
01.S05.XX	
01.S05.XX	
01.S05.XX	
01.S05.XX	
01.S05.XX	
01.S05.XX	
01.S05.XX	
01.S05.XX	
01.S05.XX	
01.S05.XX	
01.S05.XX	

REVISIONS				
REV	DESCRIPTION	DATE	DRAWN BY	APPROVED

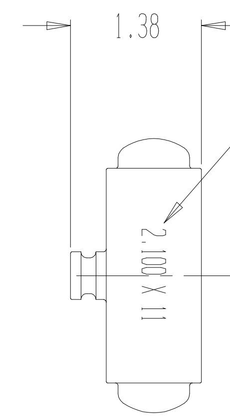

THREAD DESIGNATION CHANGES TO MATCH
THREAD SIZE OF EACH ADAPTER (SEE TABLE)
(2.100 X 11 SHOWN).

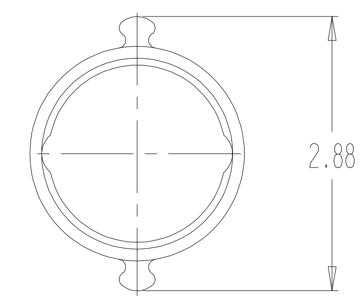

NOTES:

1) CHROME PLATED
U.S. PATENT # 7,416,223

TRIDENT
EMERGENCY PRODUCTS, LLC

1.5"SPECIAL THD CAP

REPORT ERRORS & CHANGES
REMOVE ALL SHARP EDGES
UNLESS OTHERWISE SPECIFIED
ALL DIMENSIONS ARE IN INCHES

STANDARD TOLERANCES:

DECIMALS	ANGLES
.XX ± .030	± 1/2°
.XXX ± .015	

COPYRIGHT ©
DRAWING NOT TO BE REPRODUCED OR USED TO MAKE OTHER DRAWINGS OR MACHINERY

SIZE B	.	DWG NO.	01.S05.XXPC	REV	
DRAWN BY	MS	DATE 10/24/2003	SCALE 1:2		SHEET 1 OF 1
CHECKED BY	MS				